IMPORTANCE OF MATERIAL INPUT - DESIGING OF STRUCTURALLY STABLE MULLION

ALTERNATIVE -ONE

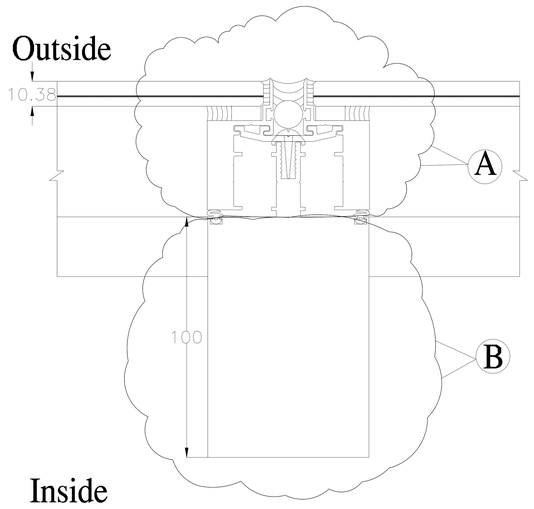

DETAIL AT A :
DERIVED FROM
SYSTEM REQUIREMENT

DETAIL AT B :
DERIVED FROM
STRUCTURAL STABILITY
REQUIREMENT

TYPICAL MULLION DETAIL AT VISION AREA

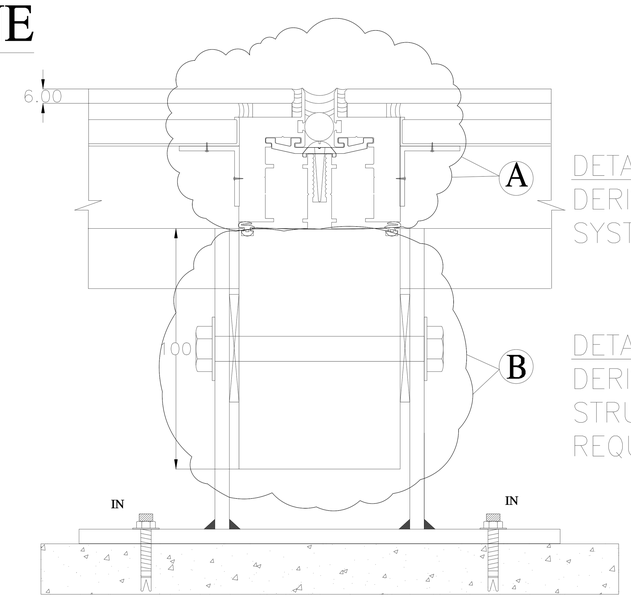

DETAIL AT A :
DERIVED FROM
SYSTEM REQUIREMENT

DETAIL AT B :
DERIVED FROM
STRUCTURAL STABILITY
REQUIREMENT

TYPICAL MULLION DETAIL AT SPANDREL AREA

ALTERNATIVE - TWO

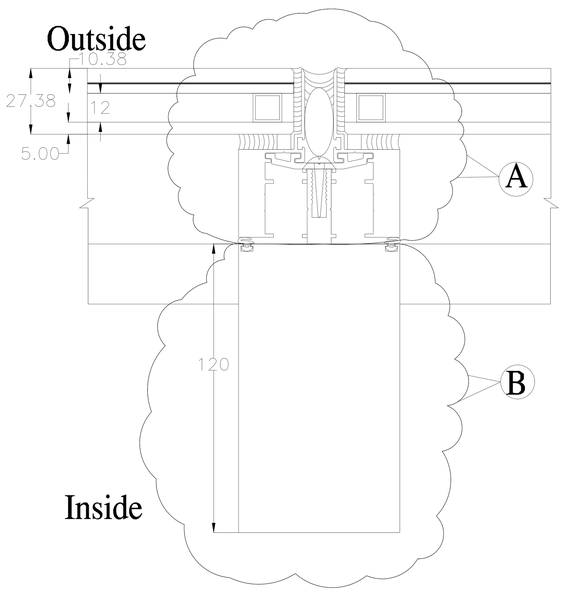

DETAIL AT A :
DERIVED FROM
SYSTEM REQUIREMENT

DETAIL AT B :
DERIVED FROM
STRUCTURAL STABILITY
REQUIREMENT

TYPICAL MULLION DETAIL AT VISION AREA

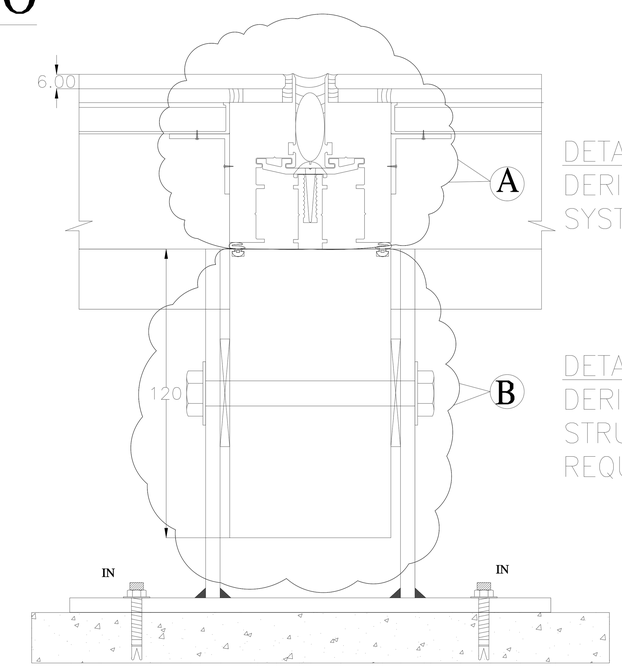

DETAIL AT A :
DERIVED FROM
SYSTEM REQUIREMENT

DETAIL AT B :
DERIVED FROM
STRUCTURAL STABILITY
REQUIREMENT

TYPICAL MULLION DETAIL AT SPANDREL AREA

NOTES:-

DRWN	VINOD	DATE:	SCALE:
CHCKD	MANISH	DRG. NO 7	
APRVD	G.K.V.	REV. NO.	

ACADEMIC INFORMATION ON DESIGN
ASPECTS OF STRUCTURAL GLAZING

TITLE

STRUCTURALLY STABLE MULLION

NEMCON FACADE CONSULT
Plot No. 569 SECTOR 5, VAISHALI, GHAZIABAD 201 012
Ph.: 91-120 - 4371643
Mob: 9313372927
E.Mail: nemconfacade@yahoo.co.in