TYPICAL MULLION DETAIL AT VISION AREA

ALTERNATIVE -ONE

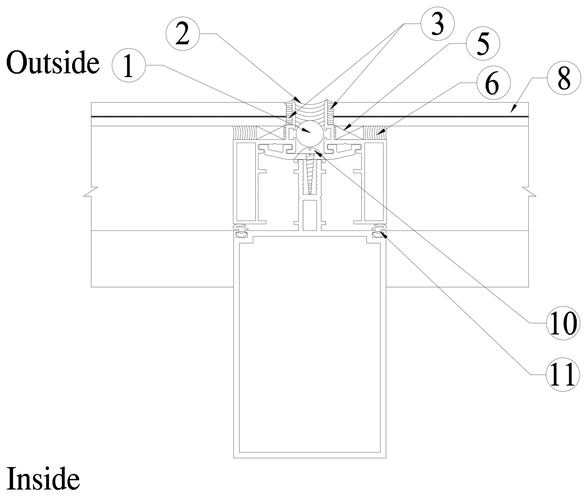

ALTERNATIVE - TWO

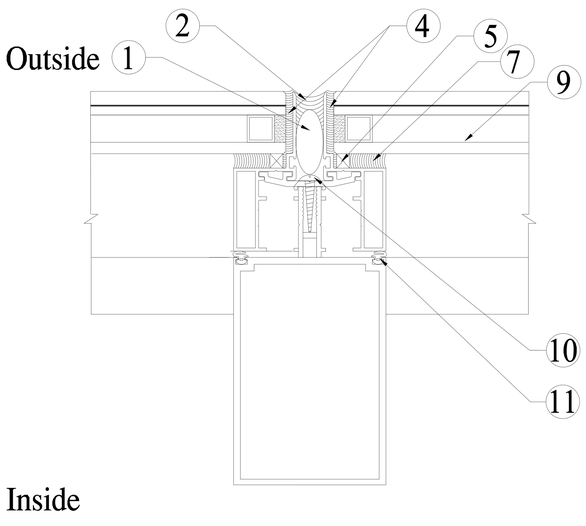

S.No	DETAIL
1.	BACKER ROD OF SUPREME INDUSTRIES MAKE
2.	WEATHER SILICON SEALANT DC-991 OF DOWCORNING OR SILPRUF NB OF GE SILICONES WIDTH _mm DEPTH _mm
3.	WEATHER SILICON SEALANT DC-991 OF DOWCORNING OR SILPRUF NB OF GE SILICONES WIDTH _mm DEPTH _mm
4.	WEATHER SILICON SEALANT DC-991 OF DOWCORNING OR SILPRUF NB OF GE SILICONES WIDTH _mm DEPTH _mm
5.	BOTH SIDE ADHESIVE TAPE NORTON MAKE V-2100 SERIES
6.	STRUCTURAL SILICONE SEALANT WITH BITE OF _mm & GLUE LINE OF _mm DC-983 (TWO PART) OR DC- 995 (SINGLE PART) OF DOWCORNING OR SSG-4400 (TW□ PART) □R SSG - 4000 (SINGLE PART) □F GE SILICON
7.	STRUCTURAL SILICONE SEALANT WITH BITE OF _mm & GLUE LINE OF _mm DC-983 (TWO PART) OR DC- 995 (SINGLE PART) OF DOWCORNING OR SSG-4400 (TW□ PART) □R SSG - 4000 (SINGLE PART) □F GE SILICON
8.	LAMINATED GLASS AS PER SPEC. 6 + (0.38 TO 1.52 PVB) + 4
9.	HERMATICALLY SEALED DOUBLE GLASS UNIT AS/SPEC DOUBLE GLAZING TO BE DONE WITH SECONDARY SEAL DEPTH OF 6mm USING DC- 982 OF DOWCORNING OR IGS- 3723 OF GE SILICONES
10.	S.S. SCREW 14X19mm REFER PANEL FIXING DRW.
11.	EPDM GASKET □F HANU INDUSTRIES

NOTES:-

NEMCON FACADE CONSULT
Plot No. 569 SECTOR 5, VAISHALI, GHAZIABAD 201 012
Ph.: 91-120 - 4371643
Mob: 9313372927
E.Mail: nemconfacade@yahoo.co.in

TITLE
TYPICAL MULLION DETAIL AT VISION

ACADEMIC INFORMATION ON DESIGN ASPECTS OF STRUCTURAL GLAZING

DRWN	VINOD	DATE:	SCALE:
CHCKD	MANISH	DRG. NO 20	
APRVD	G.K.V.	REV. NO.	

TYPICAL MULLION DETAIL AT SPANDREL AREA

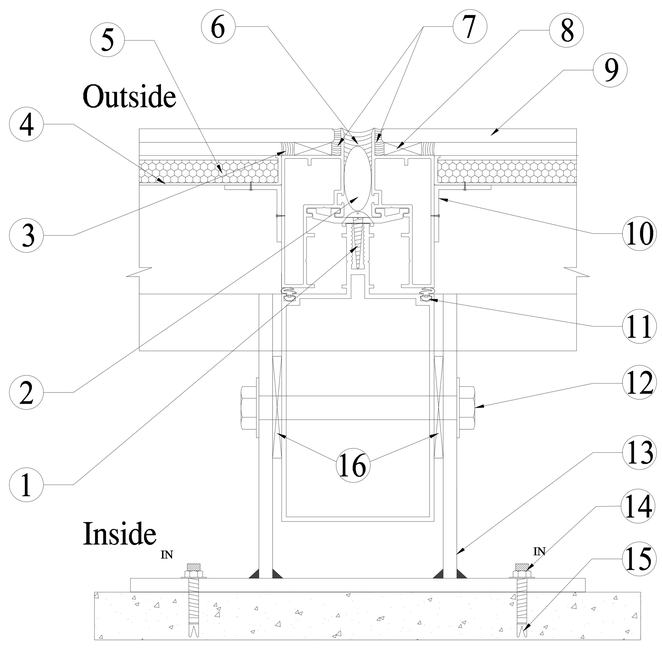

S.No	DETAIL	S.No	DETAIL
1.	S.S. SCREW 14X19mm REFER PANEL FIXING DRW.	9.	GLASS AS/SPEC.
2.	BACKER ROD OF SUPREME INDUSTRIES MAKE	10.	25X25X3mm THICK ALUMINIUM ANGLE 50mm LONG AT A SPACING OF 300mm FIXED WITH 2 NOS. ALUMINIUM RIVETS TO TRAY AND 2 NOS. OF 8X12.5 P.H.S.S. SCREW TO PROFILE
3.	STRUCTURAL SILICONE SEALANT WITH BITE OF _ mm & GLUE LINE OF _ mm DC-983 (TWO PART) OR DC-995(SINGLE PART) OF DOWCORNING OR SSG-4400 (TW□ PART) □R SSG-4000(SINGLE PART) □F GE SILICON	11.	EPDM GASKET □F HANU INDUSTRIES
		12.	S.S. BOLT 12 X 120 mm LONG WITH ONE NUT & TWO NOS. S.S. WASHERS OF 2 mm THICKNESS
4.	20 GUAGE THICK G.I. TRAY	13.	6 mm THICK M.S. BRACKET POWDER COATED IN BLACK COLOUR UP TO 50 MICRON THICKNESS WITH BERGER/NEROCOAT PURE POLYESTER POWDER
5.	10mm THICK CHEMICALLY CROSS LINKED CLOSED CELL POLYETHYLENE FOAM WITH ONE SIDE ADHESIVE INSULATION OF TROCELLEEN/SUPREME INDUSTRIES (SILXLC)	14.	METAL ANCHOR FISCHER-FBN-10/15+23 OR HILTI-HSA-M-10
6.	WEATHER SILICON SEALANT DC-991 OF DOWCORNING OR SILPRUF NB OF GE SILICONES WIDTH _mm DEPTH _mm	15.	ANCHORING DEPTH 50M.M
7.	WEATHER SILICON SEALANT DC-991 OF DOWCORNING OR SILPRUF NB OF GE SILICONES WIDTH _mm DEPTH _mm	16.	BI-METAL CORROSION SEPRATOR P.V.C. SHIM
8	BOTH SIDE ADHESIVE TAPE NORTON MAKE V-2100 SERIES		

NOTES:-

DRWN	VINOD	DATE:	SCALE:
CHCKD	MANISH	DRG. NO 21	
APRVD	G.K.V.	REV. NO.	

ACADEMIC INFORMATION ON DESIGN ASPECTS OF STRUCTURAL GLAZING

TITLE
TYPICAL MULLION DETAIL AT SPANDRAL AREA

NEMCON FACADE CONSULT
Plot No. 569 SECTOR 5, VAISHALI, GHAZIABAD 201 012
Ph.: 91-120 - 4371643
Mob: 9313372927
E.Mail: nemconfacade@yahoo.co.in